SPEC SHEET

Covet 28" Double Bath Light

Item # KW 2126AB-ALB

Designer: Kelly Wearstler

Height: 27.5"

Width: 4.5"

Extension: 2.75"

Backplate: 4.5" x 7" Square

Finishes: AB, BZ, PN

Shade Treatments: ALB

Lightsource: Dedicated LED

Wattage: 20w (2400lm)

Weight: 9 Pounds

Note: UL Only | Alabaster is a Natural Stone | Variations in Color and Texture are Expected

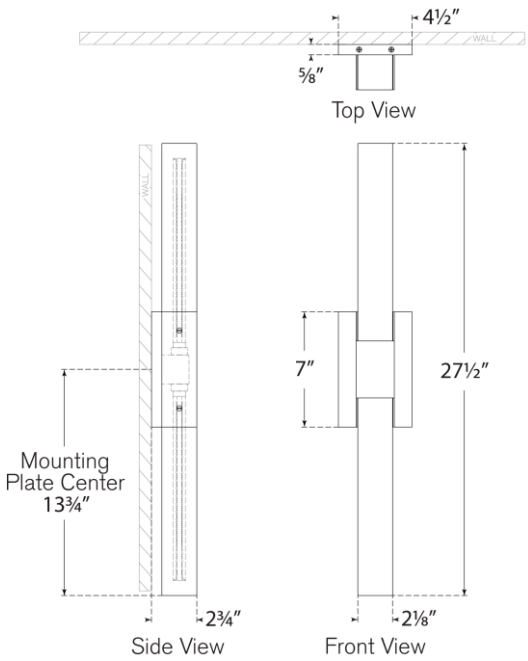

VISUAL COMFORT & CO.